Fisher Engineering
50 Gordon Drive, Rockland, Maine 04841-2139 • www.fisherplows.com

99004-1, 99008-1, 99012-1
99015-1, 99018-1

July 15, 2026
Lit. No. 43761, Rev. 05

STEEL-CASTER™

Hopper and Drive Components
STEEL-CASTER™ Hopper Spreader
with Dual Hydraulic Drive
Parts List

GENUINE FISHER SINCE 1948 FACTORY-TOUGH PARTS AND ACCESSORIES

This Parts List is for FISHER® STEEL-CASTER hopper spreaders
with serial numbers beginning with 170711 and higher.

A DIVISION OF FISHER, LLC

HOPPER COMPONENTS

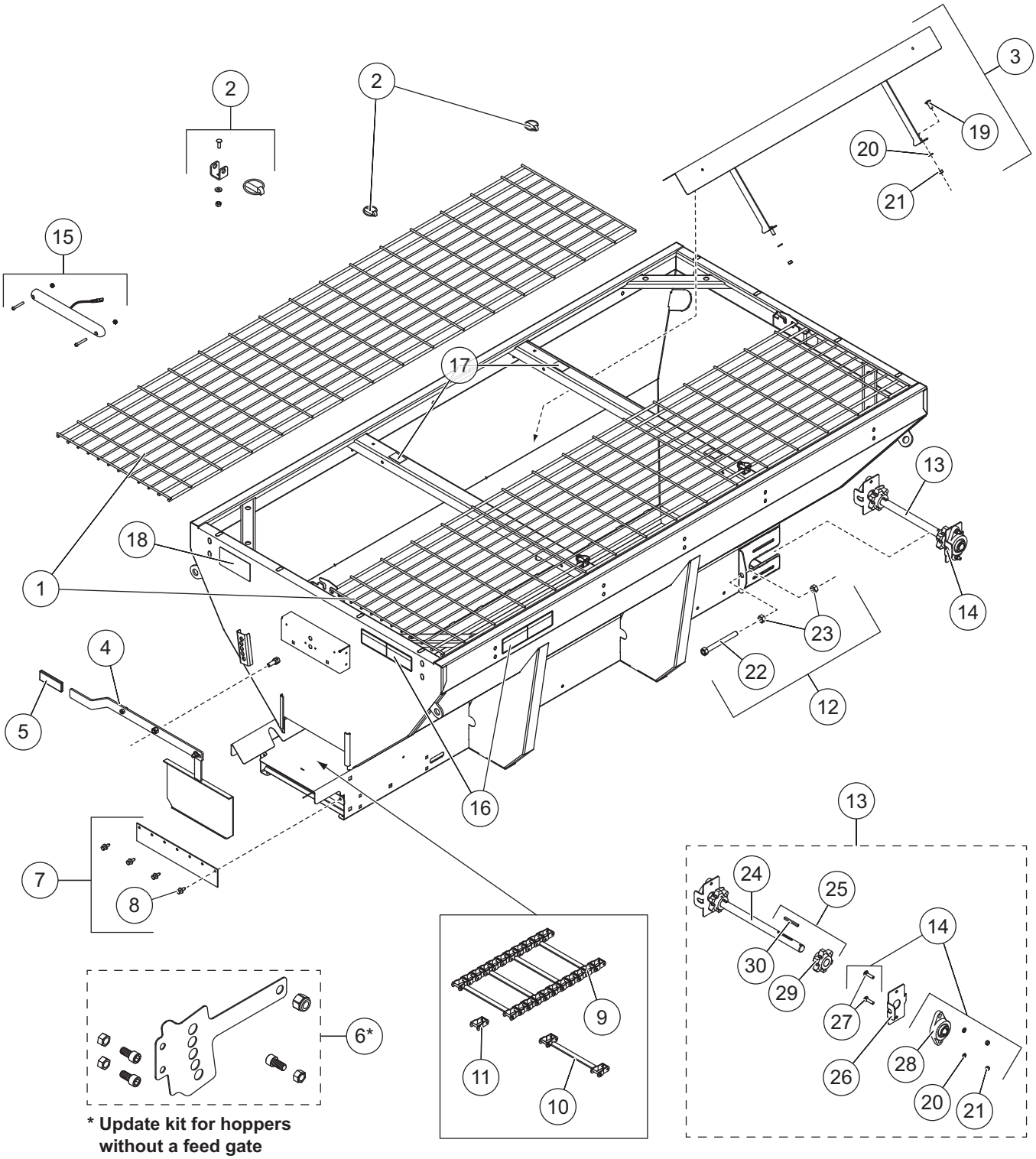

*** Update kit for hoppers without a feed gate lock bracket.**

Hopper Components & Harnesses							
Item	**Part**	**Qty**	**Description**	**Item**	**Part**	**Qty**	**Description**
1	99516	2	Top Screen – 8'	10	68492	1	Conveyor Repair Bar w/Pins & Cotters
	99517	2	Top Screen – 9' Narrow (3.0 yd^3)	11	68475	1	Conveyor Repair Link w/Pins & Cotters
	99518	2	Top Screen – 9' Wide (4.5 yd^3)	12	99073	2	Tensioner Bolt Kit
	99519	2	Top Screen – 10'	13	99480	1	Idler Shaft Assembly Kit
2	99578	1	Screen Attachment Kit (pkg of 4)	14	94953	2	Spreader Bearing Kit
3	99482	1	Inverted V Kit – 8' Hopper	15	99080	1	CHMSL Kit
	99119	1	Inverted V Kit – 9' Hopper	16	68584	2	Label – Warning/Caution, Spreaders
4	99083	1	Feed Gate Assembly	17	67272	4	Label – Caution, Do Not Lift
5	99523	1	Rubber Grip, Feed Gate Handle	18	11100	1	Label – Warning, Rear Camera
6*	90952	1	Feed Gate Update Kit	ns	68790	1	Ratchet Straps Kit (pkg of 4)
7	78266	1	Wiper Replacement Kit	ns	99736	1	Harness Assembly, CHMSL/PL, Spreader
8	99079	1	Rivet Kit, Steel Hopper Wiper (pkg of 4)				
9	68474	1	Pintle Chain (123 links) 9' & 10' Hoppers	ns	99688	1	Harness Assembly, CHMSL/PL, Vehicle
	94898	1	Pintle Chain (108 links) 8' Hopper				
Item 3			**99482 (8' hopper) / 99119 (9' & 10' hoppers) Inverted V Kits**				
19		6†	3/8-16 x 1 Carriage Bolt SS	21		10‡	3/8-16 Hex Nut SS
20		10‡	3/8 Lock Washer SS				
Item 12			**99073 Tensioner Bolt Kit**				
22		1	5/8-11 x 6 Take-Up Bolt	23		2	5/8-11 Hex Nut
Item 13			**99480 Idler Shaft Assembly Kit**				
14	94953	1	Spreader Bearing Kit	25	99479	2	6-Tooth Sprocket Assembly
24	94351	1	Idler Shaft	26	99765	2	Bearing Alignment Plate
Item 14			**94953 Spreader Bearing Kit**				
20		2	3/8 Lock Washer SS	27		2	3/8-16 x 1-1/2 Carriage Bolt SS
21		2	3/8-16 Hex Nut SS	28	94536	1	Bearing 1.125 ID 2-Bolt Flange
Item 24			**99479 6-Tooth Sprocket**				
29		1	Drive Sprocket 6T	30	95076	1	1/4 x 2-3/4 Machine Key
SS = Stainless Steel			ns = not shown				G = Grade

* Update kit required when installing replacement feed gate on hoppers without an existing lock bracket.

† Qty 4 for 8' hopper.

‡ Qty 8 for 8' hopper.

STEEL-CASTER

Label – Logo , STEEL-CASTER							
			Application				
Part	**Qty**	**Description**	**8' (2.0 yd^3)**	**9' (3.0 yd^3)**	**9' (4.5 yd^3)**	**10' (4.5 yd^3)**	**10' (6.0 yd^3)**
96992	2	Label – Side Logo, Small	■		■	■	
96994	2	Label – Side Logo, Large		■			■

POWER GROUP – HYDRAULIC SPREADERS

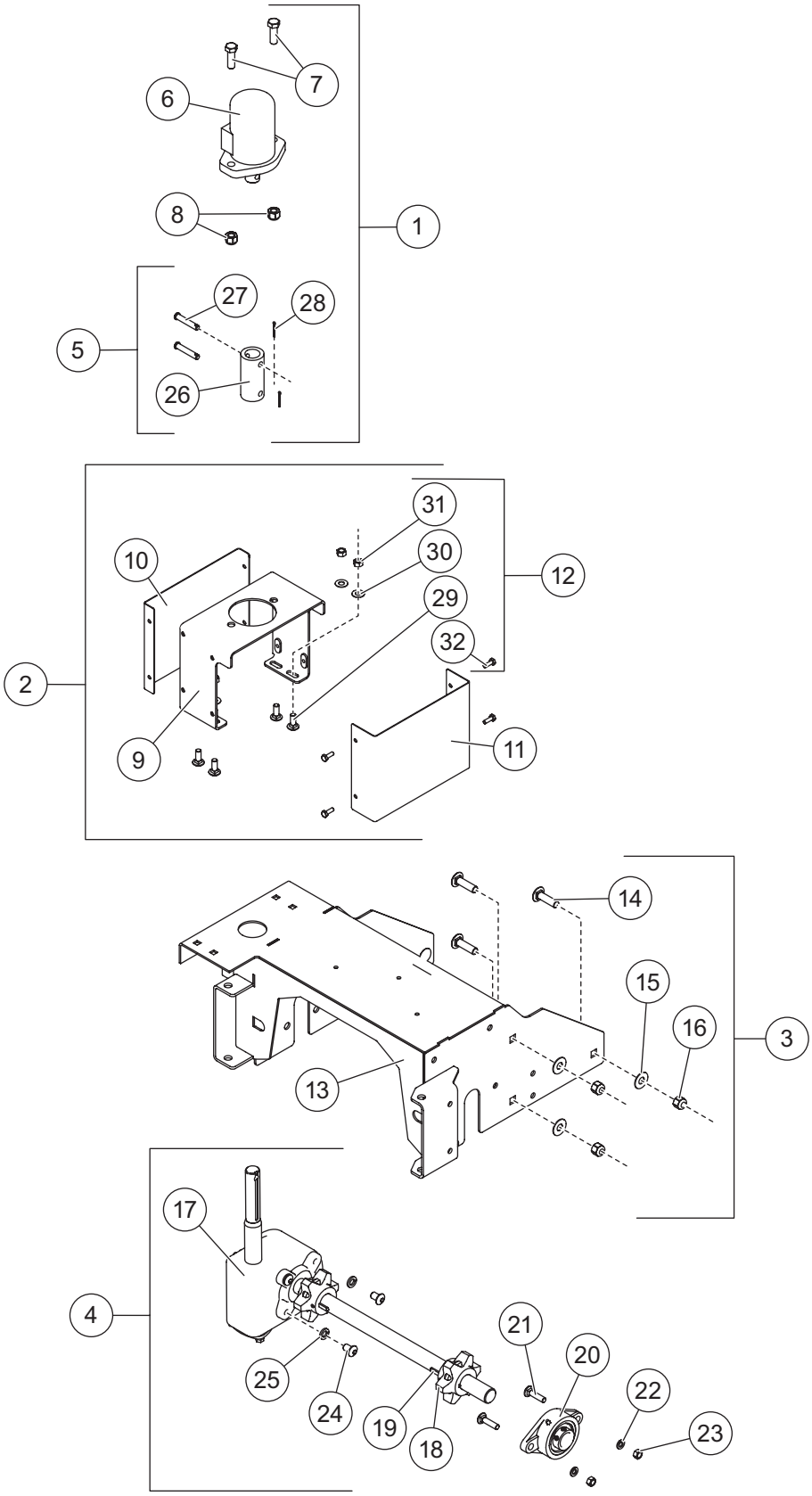

Power Group – Hydraulic Spreaders							
Item	**Part**	**Qty**	**Description**	**Item**	**Part**	**Qty**	**Description**
1	99560	1	Hydraulic Motor Kit SH	3	96543	1	Power Group – Hydraulic
2	99558	1	Hydraulic Motor Mount Kit	4	99117	1	Gear Box Assembly
Item 1			**99560 Hydraulic Motor Kit SH**				
5	96399	1	0.75 to 1.0 Coupler, Service	7		2	1/2-13 x 1-1/2 Hex Cap Screw SS
6		1	Hydraulic Motor	8		2	1/2-13 Locknut SS
ns		1	Chute Motor Spacer				
Item 2			**99558 Hydraulic Motor Mount Kit**				
9		1	Hydraulic Motor Mount	11		1	Motor Mount Cover – PS
10		1	Motor Mount Cover – DS	12	99559	1	Bolt Bag – Hydraulic Motor Mount
Item 3			**96543 Power Group – Hydraulic**				
13		1	Power Group Base	15		6	1/2 Flat Washer SS
14		6	1/2-13 x 1-3/4 Carriage Bolt SS	16		6	1/2-13 Locknut SS
Item 4			**99117 Gear Box Assembly**				
17	95567	1	Gear Case	22		2	3/8 Lock Washer SS
18	65909	2	Drive Sprocket 6T	23		2	3/8-16 Hex Nut SS
19	95076	2	1/4 x 2-3/4 Machine Key	24		4	1/2-13 x 3/4 Button Cap Screw Hex Socket
20	94536	1	Bearing 1.125 ID 2-Bolt Flange				
21		2	3/8-16 x 1-1/2 Carriage Bolt SS	25		4	1/2 Lock Washer SS
Item 5			**96399 0.75 to 1.0 Coupler, Service**				
26		1	0.75 to 1.0 Coupler, Painted	28	91901	2	1/8 x 3/4 Cotter Pin
27	67147	2	3/8 x 2 Clevis Pin HT G5				
Item 12			**99559 Bolt Bag – Hydraulic Motor Mount**				
29		4	3/8-16 x 1 Carriage Bolt SS	31		4	3/8-16 Locknut GB
30		4	3/8 Flat Washer SS	32		8	1/4-20 x 3/4 Hex Cap Screw SS
SS = Stainless Steel			ns = not shown	G = Grade			HT = Heat Treated

CHUTE ASSEMBLY

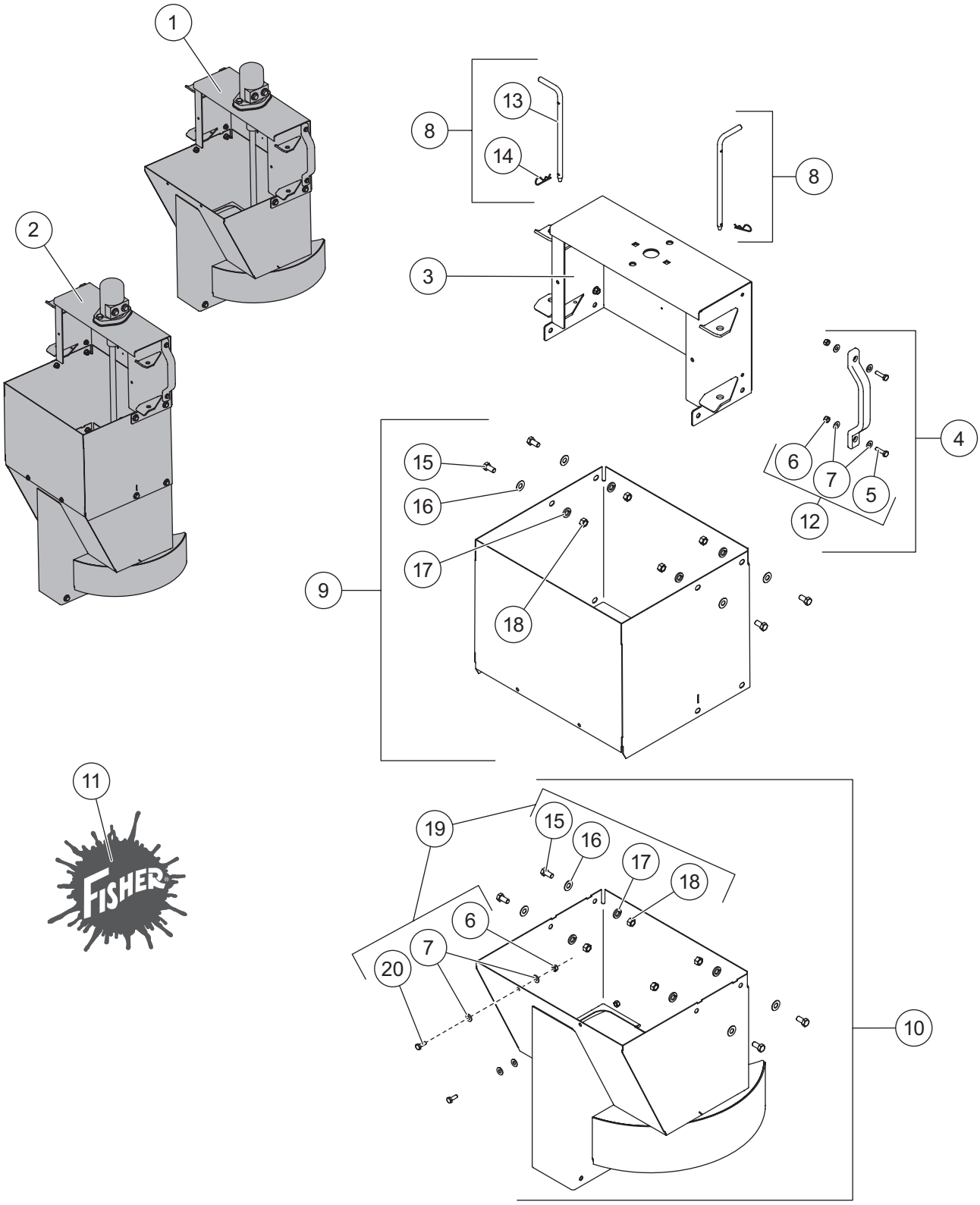

Chute Assembly							
Item	**Part**	**Qty**	**Description**	**Item**	**Part**	**Qty**	**Description**
1	99563	1	Short Chute Assembly – Complete*	7		4	1/4 Flat Washer SS
2	99564	1	Long Chute Assembly – Complete*	8	99742	1	Chute Attachment Kit (both sides)
3	96385	1	Chute Upper Section	9	99531	1	Chute Middle Section Kit
4	99098	2	Handle Kit	10	99554	1	Chute Lower Section Kit
5		2	1/4-20 x 1-1/4 Hex Cap Screw SS	11	96991	1	Label – Logo, FISHER® 9.67 x 8.85
6		2	1/4-20 Locknut GB SS				
Item 4			**99098 Handle Kit**				
		1	Handle	12	99099	1	Bolt Bag – Handle Kit
Item 8			**99742 Chute Attachment Kit**				
13		1	1/2 x 8-1/4 Chute Pin	14		1	3/32 x 2-1/4 Cotter Pin
Item 9			**99531 Chute Middle Section Kit**				
		1	Gas Chute Extension	17		4	3/8 Lock Washer SS
15		4	3/8-16 x 3/4 Hex Cap Screw SS	18		4	3/8-16 Hex Nut SS
16		4	3/8 Flat Washer SS				
Item 10			**99554 Chute Lower Section Kit**				
		1	Chute Body	19	99557	1	Bolt Bag – Lower Chute Kit
Item 12			**99099 Bolt Bag – Handle Kit**				
5		2	1/4-20 x 1-1/4 Hex Cap Screw SS	7		4	1/4 Flat Washer SS
6		2	1/4-20 Locknut GB SS				
Item 19			**99557 Bolt Bag – Lower Chute Kit**				
6		2	1/4-20 Locknut GB SS	17		4	3/8 Lock Washer SS
7		4	1/4 Flat Washer SS	18		4	3/8-16 Hex Nut SS
15		4	3/8-16 x 3/4 Hex Cap Screw SS	20		2	1/4-20 x 3/4 Hex Cap Screw SS
16		4	3/8 Flat Washer SS				
SS = Stainless Steel							G = Grade

* Includes spinner and shutter assemblies shown on following page. Logo label (item 11) not included.

SPINNER & SHUTTER ASSEMBLIES

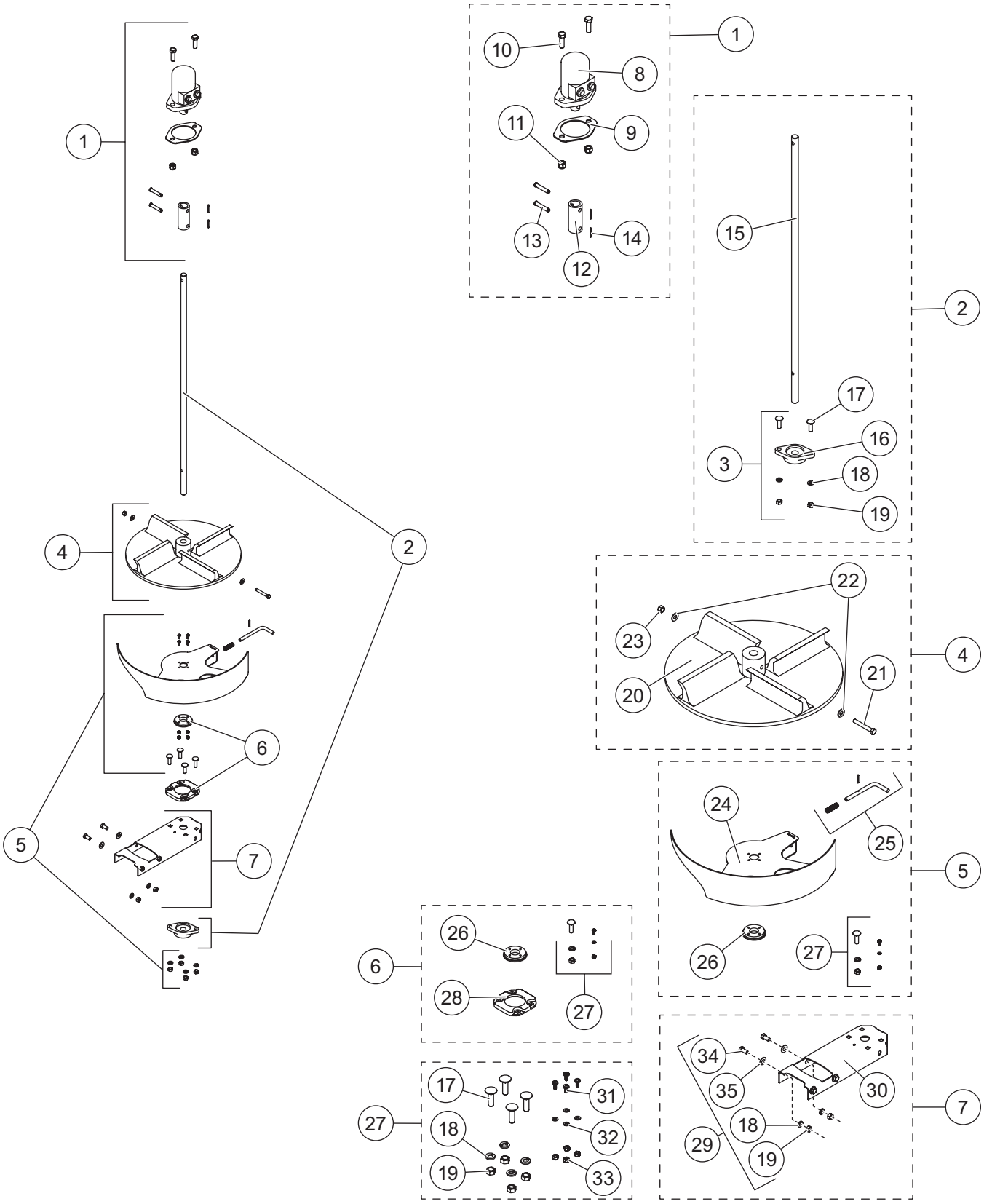

Spinner Shaft, Spinner & Shutter Assemblies							
Item	**Part**	**Qty**	**Description**	**Item**	**Part**	**Qty**	**Description**
1	99560	1	Hydraulic Motor Kit SH	4	99485	1	Poly Spinner Kit
2	99561	1	Long Spinner Shaft & Bearing Kit	5	99135	1	Shutter Replacement Kit
ns	99562	1	Short Spinner Shaft & Bearing Kit	6	96504	1	Chute Shutter Bearing Kit
3	96501	1	Bearing Kit	7	96392	1	Shutter Bearing Support Kit
Item 1			**99560 Hydraulic Motor Kit SH**				
8		1	Hydraulic Motor	12		1	.75 to 1.0 Coupler, Painted
9		1	Chute Motor Spacer	13		2	3/8 x 2 Clevis Pin HT G5
10		2	1/2-13 x 1-1/2 Hex Cap Screw SS	14		2	1/8 x 3/4 Cotter Pin
11		2	1/2-13 Locknut SS				
Item 2			**99561 Long Spinner Shaft & Bearing Kit**				
3	96501	1	Bearing Kit	15		1	Spinner Shaft – Long, Hydraulic (36")
Item 3			**96501 Bearing Kit**				
16	96167	1	Pillow Block Bearing 3/4 Bore	18		2	3/8 Lock Washer SS
17		2	3/8-16 x 1-1/4 Carriage Bolt	19		2	3/8-16 Hex Nut SS
Item 4			**99485 Poly Spinner Kit**				
20		1	Spinner, Black Poly – CW Rotation	22		2	5/16 Flat Washer SS
21		1	5/16-18 x 2-1/4 Hex Cap Screw SS	23		1	5/16-18 Locknut GB SS
Item 5			**99135 Shutter Replacement Kit**				
24		1	Chute Shutter	26		1	Chute Shutter Bearing – Inner
25	96505	1	Shutter Lock Pin Kit	27	99615	1	Bolt Bag – Shutter
Item 6			**96504 Chute Shutter Bearing Kit**				
26		1	Chute Shutter Bearing – Inner	28		1	Chute Shutter Bearing – Outer
27	99615	1	Bolt Bag – Shutter				
Item 7			**96392 Shutter Bearing Support Kit**				
29	96529	1	Bolt Bag – Shutter Bearing Support Kit	30		1	Chute Lower Bearing Support
Item 27			**99615 Bolt Bag – Shutter**				
17		4	3/8-16 x 1-1/4 Carriage Bolt	31		4	#10-32 x 1/2 #2 Pan-Head Screw SS
18		4	3/8 Lock Washer SS	32		4	#10 Flat Washer SS
19		4	3/8-16 Hex Nut SS	33		4	#10-32 Locknut GB
Item 29			**96529 Bolt Bag – Shutter Bearing Support Kit**				
18		4	3/8 Lock Washer SS	34		4	3/8-16 x 3/4 Hex Cap Screw SS
19		4	3/8-16 Hex Nut SS	35		4	3/8 Flat Washer SS
			99562 Short Spinner Shaft & Bearing Kit				
3	96501	1	Bearing Kit	ns		1	Spinner Shaft – Short, Hydraulic (24")
SS = Stainless Steel			ns = not shown	G = Grade			HT = Heat Treated

ACCESSORIES

Accessory Kits			
Part	**Description**	**Part**	**Description**
99698	Chute Extension Kit w/Long Spinner Shaft, Hydraulic	99732-1*	Secondary Work Light Kit
		99494*	Strobe Light Kit
99561	Long Spinner Shaft & Bearing Kit	76668*	Vibrator Kit
99562	Short Spinner Shaft & Bearing Kit	99488	Hopper Side Extension Kit
99627	Accessory Enclosure & Harness Kit, Hydraulic	92532	Truck Mount Kit, 2 Bars – 8' Hopper
		92533	Truck Mount Kit, 3 Bars – 9' & 10' Hoppers
99686*	License Plate Light Kit	99690	Tie-Down Kit SH Chain
99505-1*	Primary Work Light Kit	95245	Dual-Flow Control Valve

* Requires installation of the 99627 Accessory Enclosure & Harness Kit, Hydraulic.

Pre-Wet Kits			
Part	**Description**	**Part**	**Description**
76400	Standard Pump Kit, On-Off System	76425	50-Gallon Tank Kit (2 x 25 gal)
76420	Deluxe Pump Kit, Full-Feature System	76450	100-Gallon Tank Kit (2 x 50 gal)
76405	Pre-Wet Pump Switch Kit		

Fisher Engineering
50 Gordon Drive
Rockland, ME 04841-2139
www.fisherplows.com

A DIVISION OF FISHER, LLC

Copyright © 2026 Douglas Dynamics, LLC. All rights reserved. This material may not be used, reproduced, or copied in any manner, in whole or in part, in any printed, mechanical, electronic, film, or other distribution and storage media, nor analyzed or manipulated in any manner for the purpose of training artificial intelligence technologies or systems, without the written consent of Fisher Engineering. In accordance with Article 4(3) of the Digital Single Market Directive 2019/790, Fisher Engineering expressly reserves this work from the text and data mining exception. Authorization to photocopy items for internal or personal use by Fisher Engineering outlets or equipment owner is granted.

Fisher Engineering reserves the right under its product improvement policy to change construction or design details and furnish equipment when so altered without reference to illustrations or specifications used. Fisher Engineering or the vehicle manufacturer may require or recommend optional equipment for spreaders. Do not exceed vehicle ratings with a spreader. Fisher Engineering offers a limited warranty for all equipment and accessories. See separately printed page for this important information. The following are registered (®) or unregistered (™) trademarks of Douglas Dynamics, LLC: FISHER®, STEEL-CASTER™.

Printed in U.S.A.